DO NOT SCALE

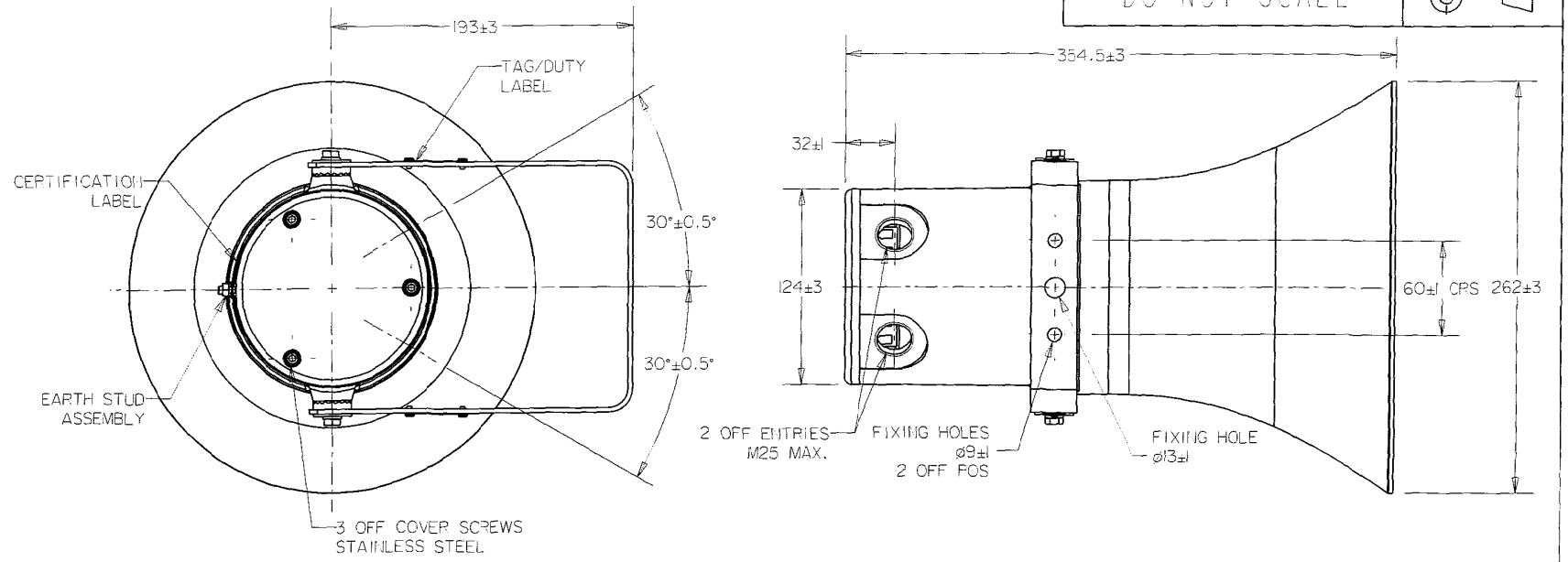

1. TYPE DBI6 LOUDSPEAKER

2. CERTIFICATION No.
   IIB UNIT BaseefaO4ATEXI66X II 2G EEx de IIB T3 (-50°C TO +40°C)

   IIC UNIT BaseefaO4ATEXI67X II 2GD EEx de IIC T110°C (-50°C TO +40°C)

3. WEIGHT:- 30W - 5.5 ±0.3Kg
   8OHM - 5.3 ±0.3 Kg

4. MATERIAL:- GLASS REINFORCED POLYESTER

5. OPTIONAL DUTY LABEL, LETTER SIZE 5mm MAX.

6. OPTIONAL TAGF LABEL, LETTER SIZE 5mm MAX.

7. TERMINALS SUITABLE FOR UP TO 2.5mm^2 CABLE

MEDC
e-mail:info@medc.com web:www.medc.com
DESIGNERS & MANUFACTURERS OF ELECTRICAL & ELECTRONIC EQUIPMENT & SYSTEMS FOR HAZARDOUS AREAS

ISSUES

ALL DIMENSIONS ARE IN MILLIMETRES UNLESS OTHERWISE STATED

REMOVE ALL BURRS AND SHARP CORNERS

MACHINE SYMBOLS THUS ▽

THIS DRAWING IS CONFIDENTIAL AND IS THE PROPERTY OF MEDC AND MUST NOT BE REPRODUCED EITHER WHOLLY OR PARTLY. ALL RIGHTS IN RESPECT OF PATENTS, DESIGNS AND COPYRIGHT ARE RESERVED

DRAWN BY: P.FISHWICK	DATE: 25/06/03	TITLE	
CHECKED BY: M.SLACK.	DATE: 28-06-04	DBI6 ATEX CUSTOMER GA	
APPROVED BY: P.OATES.	DATE: 28-06-04		
SCALE: 1:4	SIZE: A4	DRG No. 286-114	ISSUE A

DO NOT SCALE

CURRENT PRODUCTION COPY

CELL BOOK	H

100V LINE VERSION

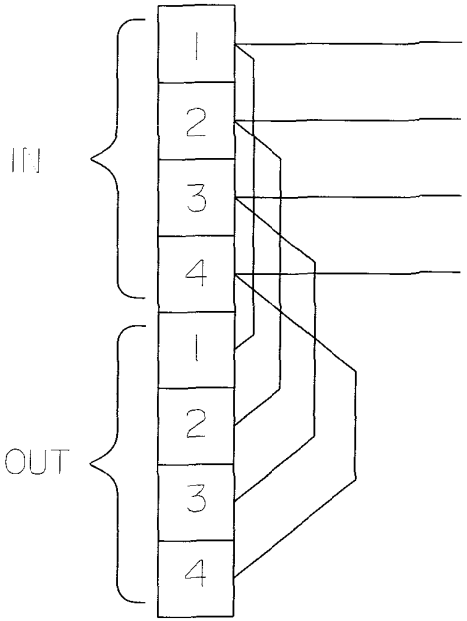

TERMINALS	POWER
1:2	30W
2:3	25W
3:4	12W
1:3	6W
2:4	4W
1:4	2W

80hm VERSION

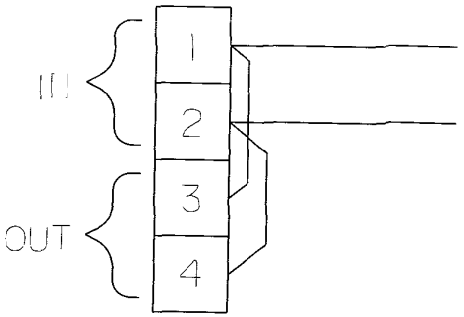

TERMINAL	DRIVER TERMINAL
1 + 3	+VE
2 + 4	-VE

MEDC

MEDC Ltd, Colliery Road, Pinxton
Nottingham NG16 6LF, U.K.
Tel: +44 (0)1773 [illegible]
Fax: +44 (0)1773 [illegible]
e-mail: info@medc.com web: www.medc.com

DESIGNERS & MANUFACTURERS OF ELECTRICAL & ELECTRONIC EQUIPMENT & SYSTEMS FOR HAZARDOUS AREAS

ISSUES

ALL DIMENSIONS ARE IN MILLIMETRES UNLESS OTHERWISE STATED

REMOVE ALL BURRS AND SHARP CORNERS

MACHINE SYMBOLS THUS ✓

THIS DRAWING IS CONFIDENTIAL AND IS THE PROPERTY OF MEDC AND MUST NOT BE REPRODUCED EITHER WHOLLY OR PARTLY. ALL RIGHTS IN RESPECT OF PATENTS, DESIGNS AND COPYRIGHT ARE RESERVED

DRAWN BY: P.FISHWICK	DATE: 14/01/03	TITLE: DB16 100V / 80HM WIRING DIAGRAM
CHECKED BY: M.SLACK	DATE: 14/01/03	
APPROVED BY: P.FISHWICK	DATE: 14/01/03	
SCALE: N.T.S	SIZE: A4	DRG No. 286-113 — ISSUE A