JUNCTION BOXES
EExd, EExe
Weatherproof

ATEX

Introduction

A range of small junction boxes for Zone 1 or Zone 2 use.

Available in stainless steel, marine grade alloy, galvanised cast iron, or epoxy paint coated.

Various terminals and entries can be accommodated.

- ★ Zone 1 and Zone 2 use.
- ★ EExd, EExe.
- ★ ATEX approved Ex II 2G.
- ★ BASEEFA certified.
- ★ IP66 & 67.

MEDC Ltd, Colliery Road,
Pinxton, Nottingham NG16 6JF, UK.
Tel: +44 (0)1773 864100
Fax: +44 (0)1773 582800

MEDC International, 5829 West Sam Houston Parkway,
North, Suite 1005, Houston, Texas 77041, USA.
Tel: +1 (713) 937 9772
Fax: +1 (713) 937 9773

MEDC Norway, Auglaendsmyraa 6,
4016, Stavanger, Norge.
Tel: +47 913 92 289
Fax: +47 914 46 030

Sales Enq. Fax: +44 (0)1773 582830 Sales Orders Fax: +44 (0)1773 582832
E-Mail: sales@medc.com Web: www.medc.com

MEDC

'e' Protection	DUST-TIGHT AND WEATHERPROOF
MODEL 82e	**MODEL 8DTWP**

ATEX approved Ex II 2G.
EExe IIT6.
Certificate No. – Baseefa03ATEX0107X
CENELEC EN 50 014
EN 50 019
Zone 1 & Zone 2.

Terminal Type	No. off	Max Volts	Max Amps	Max Conductor size mm²
BK6	6	275	21	0.5– 4.0
MK6/4	4	418	26	0.5–10.0

Weight 1.3 kg

A dust-tight and waterproof version where BASEEFA Certification is not required.

Terminal Type	No. off	Max Volts	Max Amps	Max Conductor size mm²
BK6	6	440	25	0.5– 4.0
MK3/6	6	440	18	0.22– 2.5
MK6/4	4	440	31	0.5–10.0

Weight 1.3 kg

Ambient Temperature:	-20°C to +40°C.
Entry Sizes:	Max. one per face in 20mm or 25mm ISO.
Material:	Cast iron body, stainless steel cover screws, neoprene gasket.
Finish:	Either hot dipped galvanised or epoxy painted.
Ordering Details:	See reverse side.
Ingress Protection:	IP66 & 67.

Model 82e

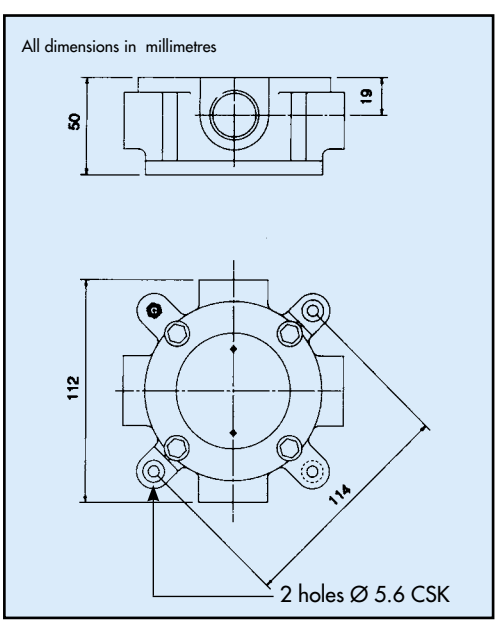

'd' Protection

MODEL SM87JB

ATEX approved Ex II 2GD.
EExd IIC T5/T6.
Certificate No. Bas03ATEX 0463.
CENELEC EN 50 014 & EN 50 018.
Zone 1 & Zone 2.

Terminals KLIPPON	No. off	Max. Volts	Max. Amps	Max. Conductor size (mm^2)
BK6	6	440V	25A	4
MK3/10	10			2.5
AKZ4	12			4
SAKD2.5N	12			2.5
SAK2.5	8			2.5
SAK4	6			4
PHOENIX				
MBK	12			1.5
MBK5	12			4
MBK6	10			6
BK4	10			4
AK16	3			16

Certified Ambient Temperature:	-55°C to +70°C (T5). -55°C to +55°C (T6).
Weight:	3.1kg.
Entry Sizes:	Max. one per face in 20mm or 25mm ISO.
Material:	Stainless steel grade ANC4B, marine grade alloy.
Finish:	Epoxy painted.
Ingress Protection:	IP66 & 67.
Ordering Details:	See reverse side.
Resistor or Diode:	Can be fitted – contact sales office for information.

Model SM87JB

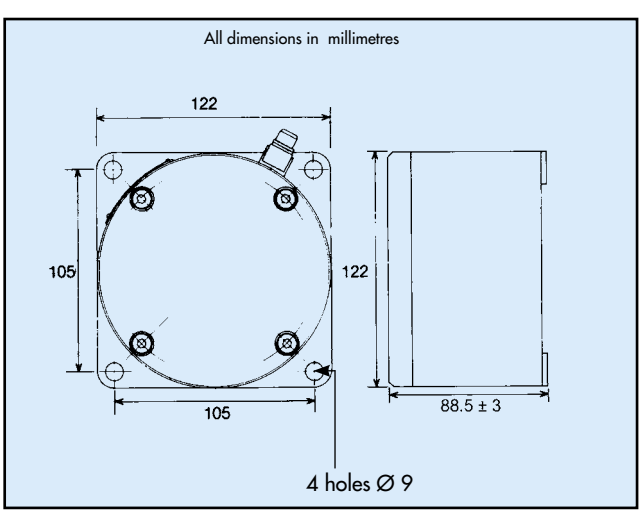

Ordering Requirements

The following code is designed to help in the selection of the correct unit. Build up the reference number by inserting the code for each component into the appropriate box. **Standard products, available ex-stock, as follows:**

Product	Description
SM87JBA1T1B1R1L11NG	SM87 Junction Box, EExd IIC T6, Zones 1 & 2, BK6 terminals, 4 x 20mm entries, 1 per face, marine grade alloy, painted grey.
82E1T1B1R1L11NG	82E Junction Box, EExe II T6, Zones 1 & 2, BK6 terminals, 4 x 20mm entries, 1 per face, cast iron, painted grey.

Junction Box

Model
82E
8DTWP
SM87JBA (alloy)
SM87JBS (stainless steel)

Entries

Entries	Code
20mm	1
25mm	2
Other please specify	3
Top	*T
Bottom	*B
RHS	*R
LHS	*L

*prefix position with entry size code.
e.g. 1T1B=20mm Top and Bottom entries.

Terminals

Terminal	Code
BK6	11
MK3/10	12
AKZ 4	13
SAKD2.5N	14
SAK2.5	15
SAK4	16
MBK	21
MBK5	22
MBK6	23
BK4	24
AK16	26
MK6/4	28
MK3/6	29

Tag/Duty Label

Label	Code
None	N
Yes	Y
please specify in text.	

Finish

Finish	Code
Red	R
Blue	B
Yellow	Y
Yellow/Black Stripes	X
Grey	G
other or special finish please specify	S

All the above specifications, dimensions, weights and tolerances are nominal (typical) and MEDC reserve the right to vary all data without prior notice. No liability is accepted for any consequence of use.