276-155

DO NOT SCALE

DIRECT MOUNT VERSION

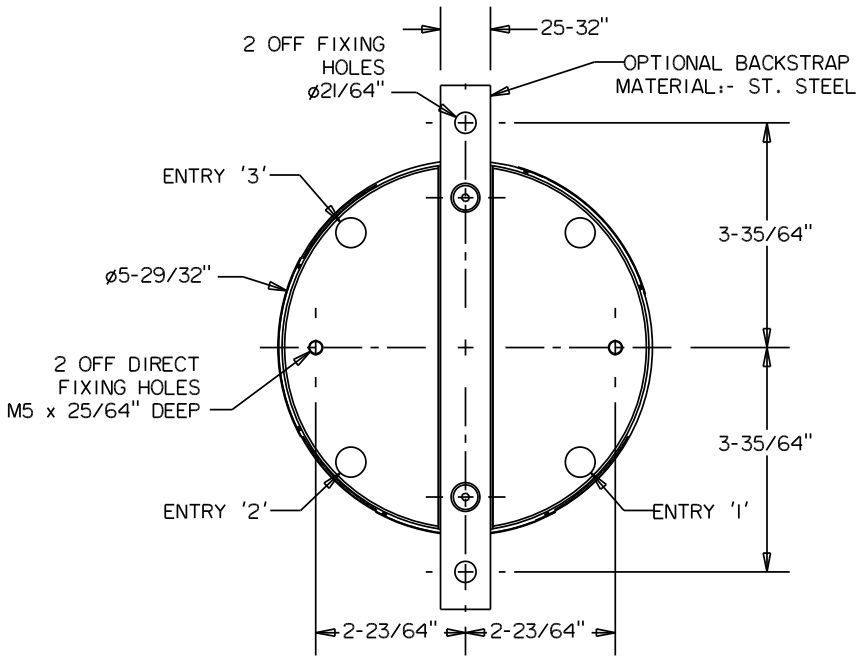

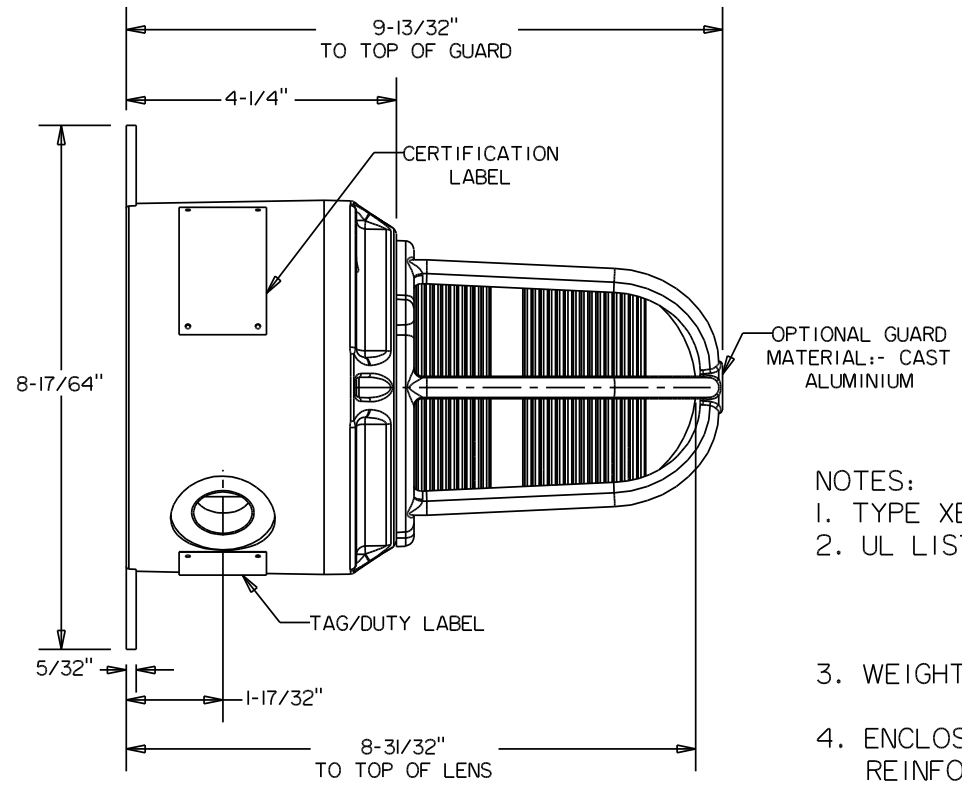

NOTES:
1. TYPE XB15 XENON STROBE
2. UL LISTING No. E187894, CLASS I, DIV. 2 GROUPS A-D
   CLASS I, ZONE I AExd IIC T5/T6
   T6 (-67°F TO +131°F)
   T5 (-67°F TO +158°C)
3. WEIGHT:- POLE MOUNT VERSION - 5.75 ±0.5 lbs
   DIRECT MOUNT VERSION - 6.5 ±0.5 lbs
4. ENCLOSURE AND COVER MATERIAL:- GLASS REINFORCED POLYESTER
5. OPTIONAL TAG/DUTY LABEL, LETTER SIZE 3/16" MAX.
6. TERMINALS ARE SUITABLE FOR THE FOLLOWING:-
   DIRECT MOUNT:- UP TO 12-WAY, 440V, 25A, 14AWG
   POLE MOUNT:- UP TO 8-WAY, 440V, 25A, 14AWG
7. CABLE ENTRIES:-
   DIRECT MOUNT:- UP TO 3 x 1/2"NPT OR 3 x 3/4"NPT @ POS. '1', '2' & '3'
   POLE MOUNT:- 1 x 1/2"NPT OR 1 x 3/4"NPT
8. GENERAL TOLERANCE: 1/32" UOS

POLE MOUNT VERSION

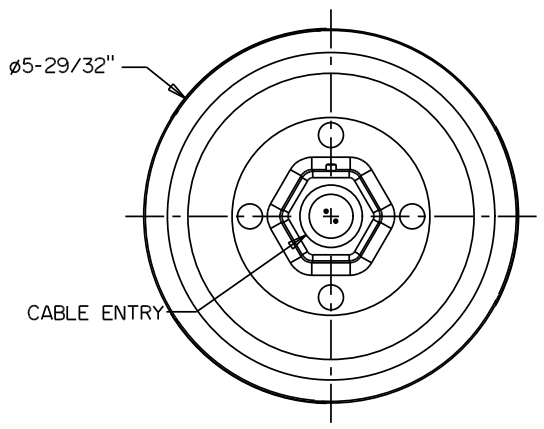

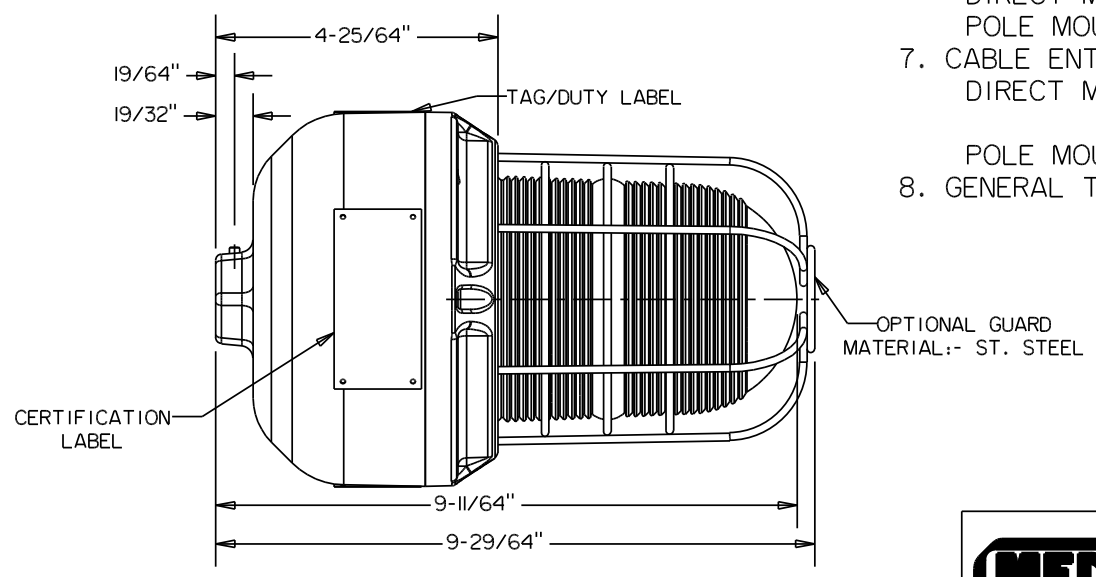

MEDC Ltd, Colliery Road, Pinxton
Nottingham NG16 6JF, U.K.
Tel: +44 (0)1773 864100
Fax: +44 (0)1773 582800
e-mail:info@medc.com web:www.medc.com

DESIGNERS & MANUFACTURERS OF ELECTRICAL & ELECTRONIC EQUIPMENT & SYSTEMS FOR HAZARDOUS AREAS

ISSUES

ALL DIMENSIONS ARE IN MILLIMETRES UNLESS OTHERWISE STATED

REMOVE ALL BURRS AND SHARP CORNERS

MACHINE SYMBOLS THUS

THIS DRAWING IS CONFIDENTIAL AND IS THE PROPERTY OF MEDC AND MUST NOT BE REPRODUCED EITHER WHOLLY OR PARTLY. ALL RIGHTS IN RESPECT OF PATENTS, DESIGNS AND COPYRIGHT ARE RESERVED.

DRAWN BY: P.FISHWICK	DATE: 26/06/03	TITLE: XB15 UL CUSTOMER GA	SHT 1 OF 2
CHECKED BY: M.SLACK	DATE: 11/07/03		
APPROVED BY: P.FISHWICK	DATE: 11/07/03		
SCALE: N.T.S	SIZE: A3	DRG No. 276-155	ISSUE A

276-160

DO NOT SCALE

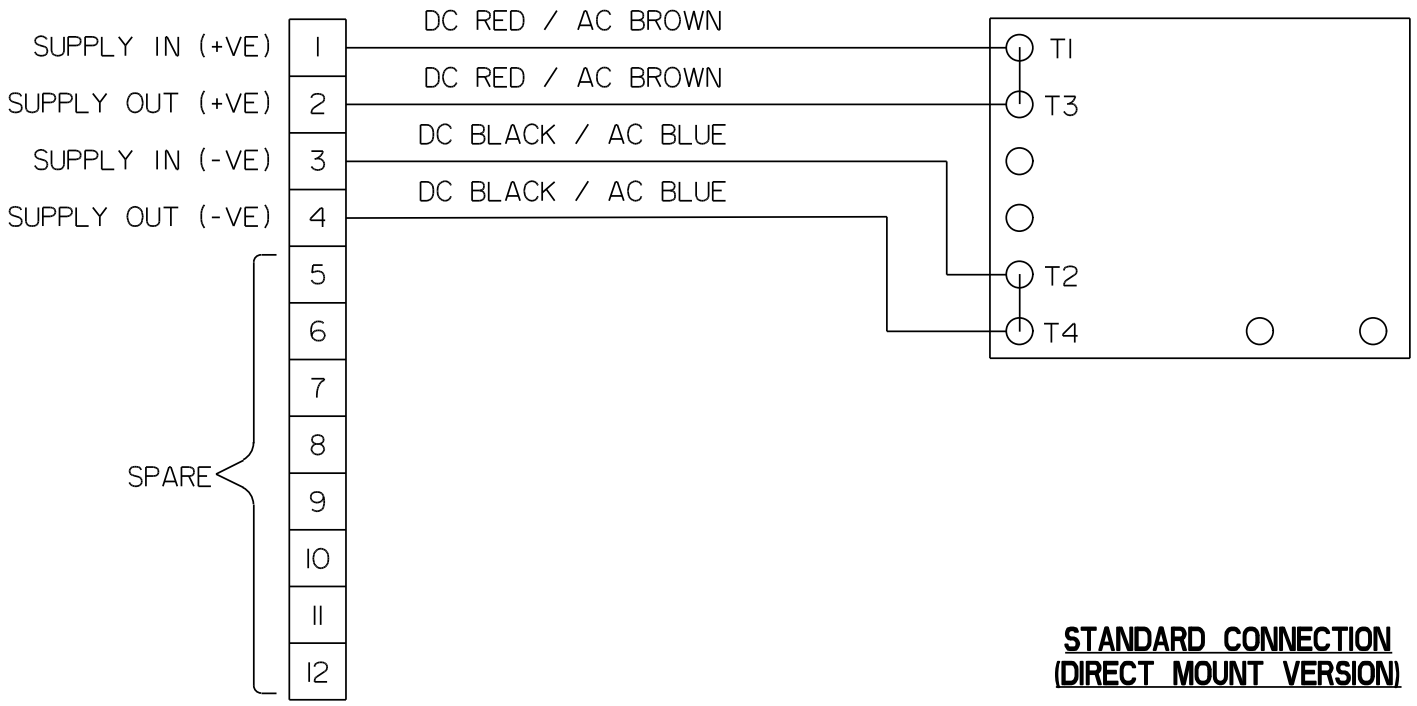

STANDARD CONNECTION (DIRECT MOUNT VERSION)

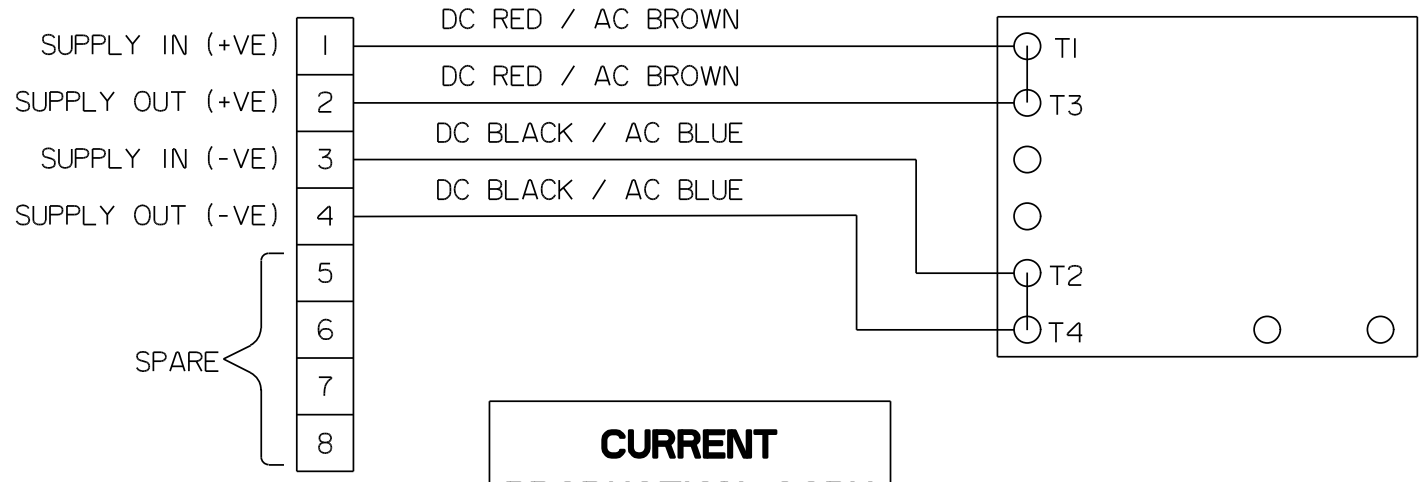

STANDARD CONNECTION (POLE MOUNT VERSION)

CURRENT PRODUCTION COPY

CELL BOOK	E

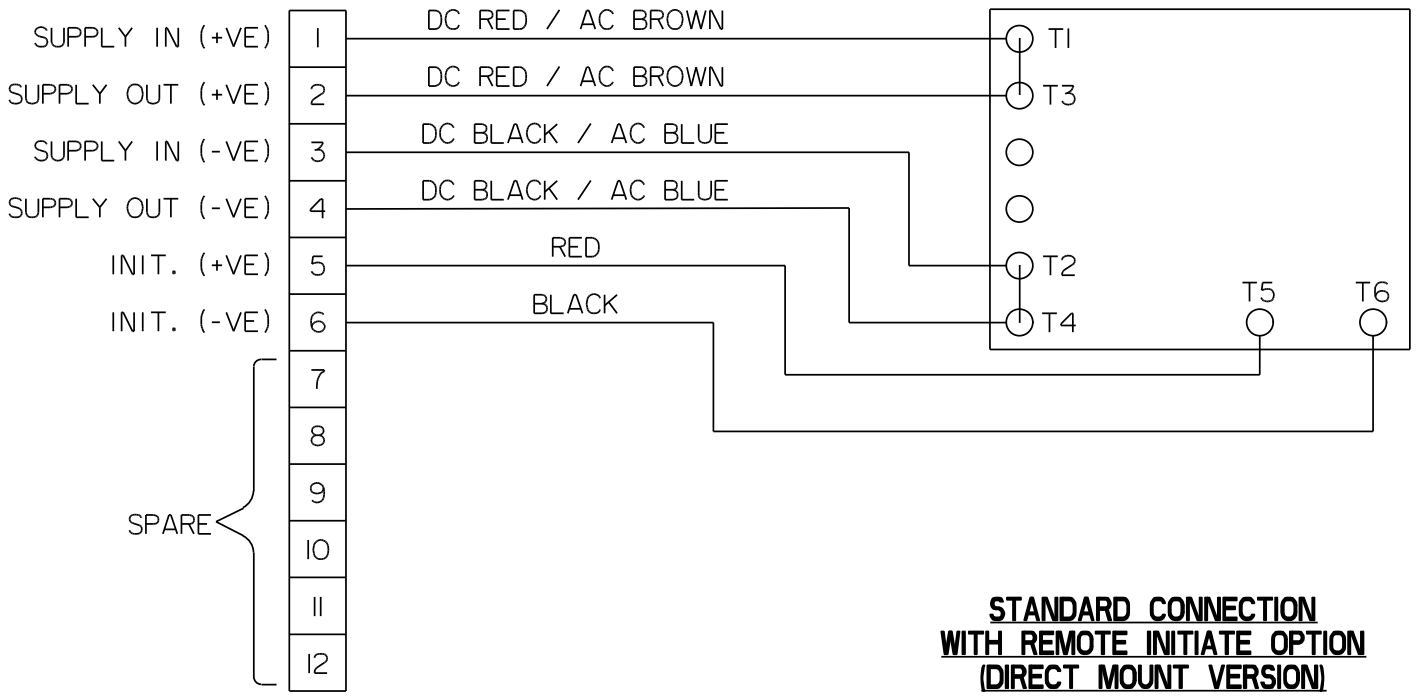

STANDARD CONNECTION WITH REMOTE INITIATE OPTION (DIRECT MOUNT VERSION)

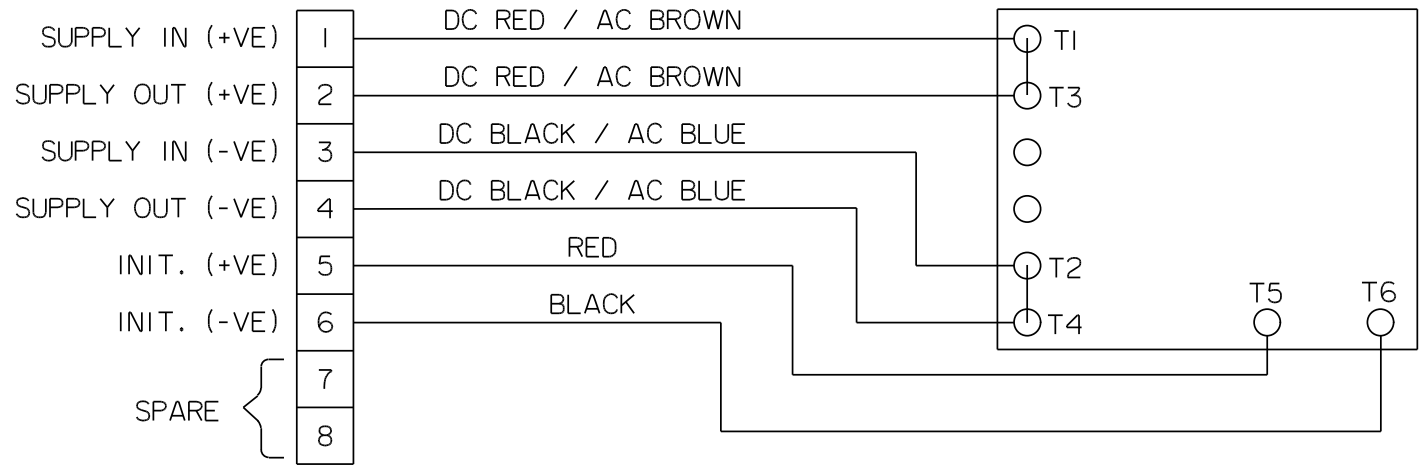

STANDARD CONNECTION WITH REMOTE INITIATE OPTION (POLE MOUNT VERSION)

MEDC Ltd, Colliery Road, Pinxton
Nottingham NG16 6JF, U.K.
Tel: +44 (0)1773 864100
Fax: +44 (0)1773 582800
e-mail:info@medc.com web:www.medc.com

DESIGNERS & MANUFACTURERS OF ELECTRICAL & ELECTRONIC EQUIPMENT & SYSTEMS FOR HAZARDOUS AREAS

ISSUES

ALL DIMENSIONS ARE IN MILLIMETRES UNLESS OTHERWISE STATED

REMOVE ALL BURRS AND SHARP CORNERS

MACHINE SYMBOLS THUS

THIS DRAWING IS CONFIDENTIAL AND IS THE PROPERTY OF MEDC AND MUST NOT BE REPRODUCED EITHER WHOLLY OR PARTLY. ALL RIGHTS IN RESPECT OF PATENTS, DESIGNS AND COPYRIGHT ARE RESERVED.

DRAWN BY: P.FISHWICK	DATE: 12/10/04	TITLE: XB15 UL WIRING DIAGRAM	SHT 2 OF 2
CHECKED BY: M.SLACK	DATE: 12/10/04		
APPROVED BY: P.FISHIWCK	DATE: 12/10/04		
SCALE: N.T.S	SIZE: A3	DRG No. 276-160	ISSUE A