276-154

DO NOT SCALE

NOTES:
1. TYPE XB15 XENON BEACON
2. CERTIFICATION No. BASEEFA04ATEX0009X.
   II 2 GD EEx d IIC T6 (-55°C TO +55°C)
   T5 (-55°C TO +70°C)
3. WEIGHT:- POLE MOUNT VERSION - 2.6 ±0.3 Kg
   DIRECT MOUNT VERSION - 3.0 ±0.3 Kg
4. ENCLOSURE AND COVER MATERIAL:- GLASS REINFORCED POLYESTER
5. OPTIONAL TAG/DUTY LABEL, LETTER SIZE 5mm MAX.
6. TERMINALS ARE SUITABLE FOR THE FOLLOWING:-
   DIRECT MOUNT:- UP TO 12-WAY, 440V, 25A, 2.5mm^2
   POLE MOUNT:- UP TO 8-WAY, 440V, 25A, 2.5mm^2
7. CABLE ENTRIES:-
   DIRECT MOUNT:- 3 x M25 x 1.5p MAX. @ POS, '1', '2' & '3'
   POLE MOUNT:- 1 x M25 x 1.5p MAX.

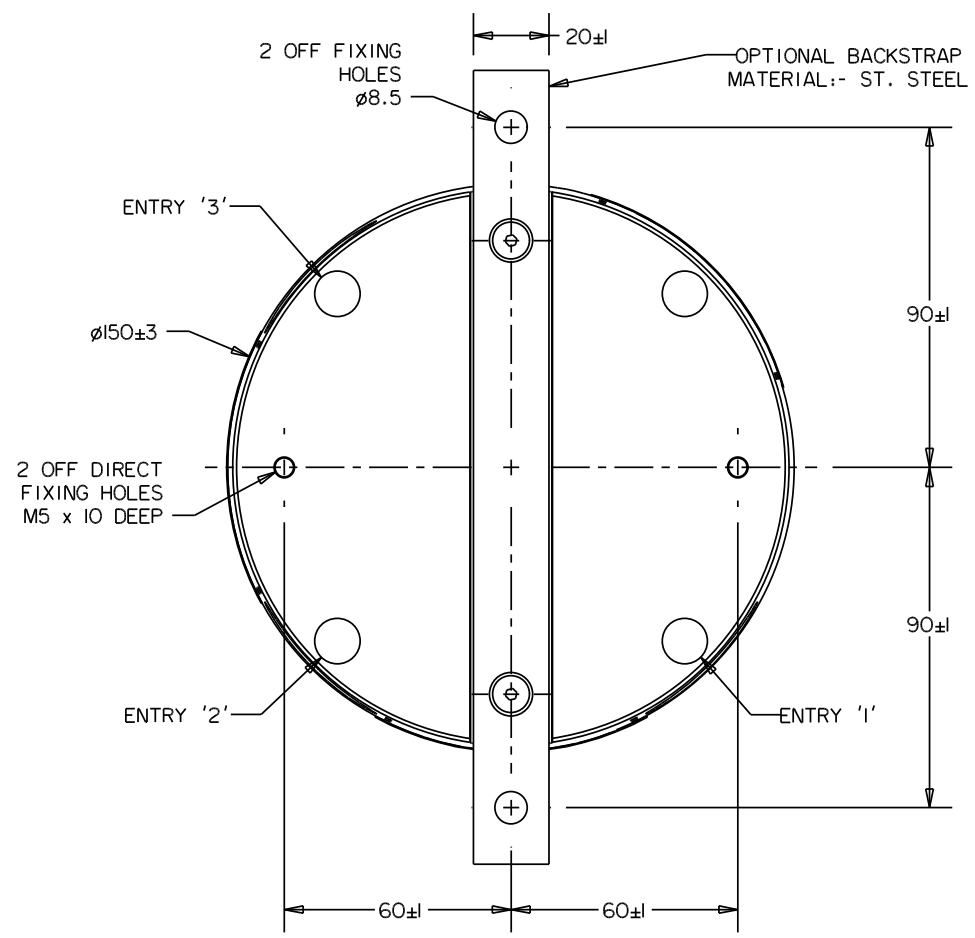

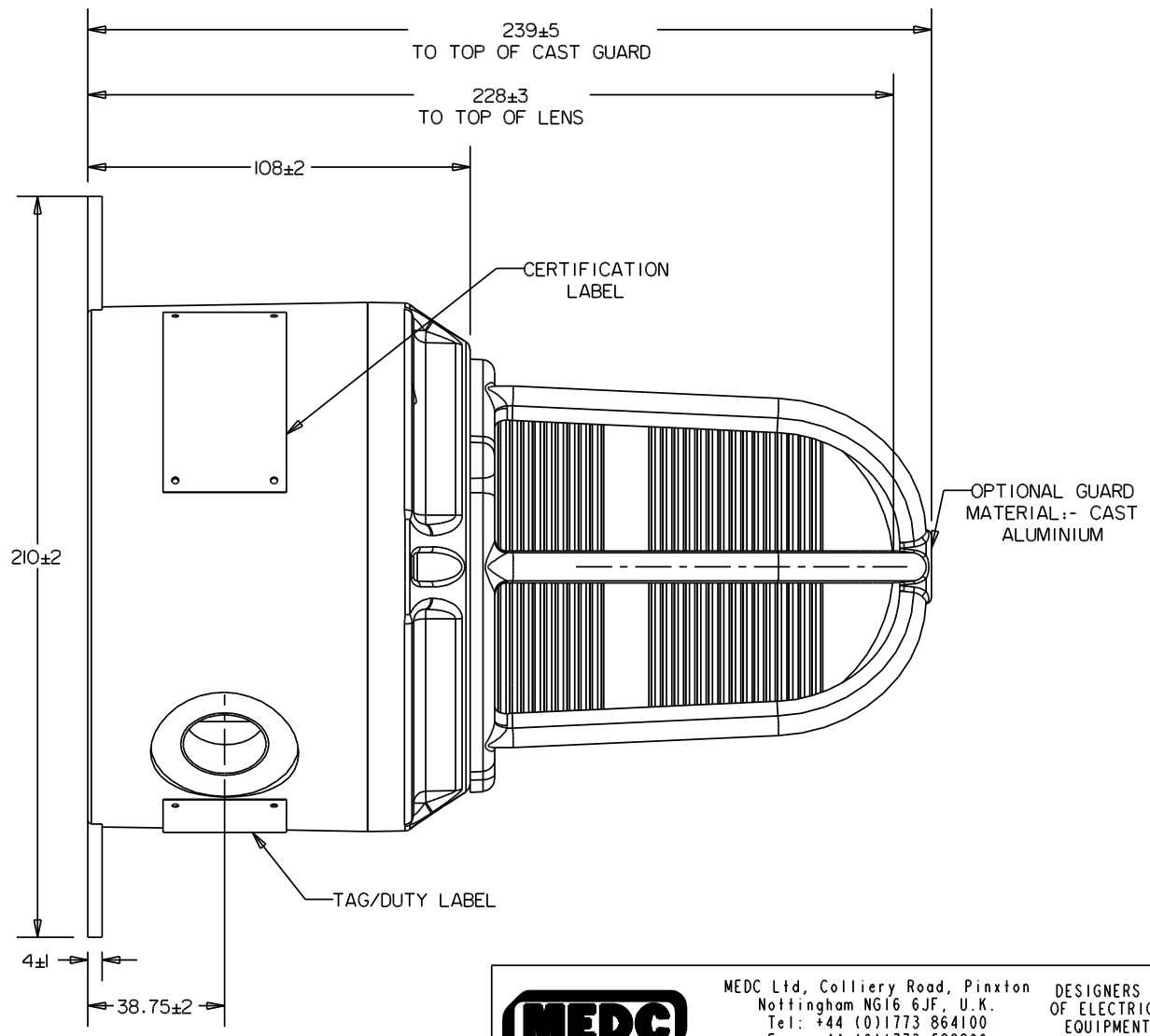

MEDC

MEDC Ltd, Colliery Road, Pinxton
Nottingham NG16 6JF, U.K.
Tel: +44 (0)1773 864100
Fax: +44 (0)1773 582800
e-mail:info@medc.com web:www.medc.com

DESIGNERS & MANUFACTURERS OF ELECTRICAL & ELECTRONIC EQUIPMENT & SYSTEMS FOR HAZARDOUS AREAS

ISSUES	GENERAL TOLERANCES UOS	ALL DIMENSIONS ARE IN MILLIMETRES UNLESS OTHERWISE STATED	THIS DRAWING IS CONFIDENTIAL AND IS THE PROPERTY OF MEDC AND MUST NOT BE REPRODUCED EITHER WHOLLY OR PARTLY. ALL RIGHTS IN RESPECT OF PATENTS, DESIGNS AND COPYRIGHT ARE RESERVED.	DRAWN BY: P.FISHWICK	DATE: 26/06/03	TITLE: XB15 ATEX CUSTOMER GA	SHT 1 OF 2
	±0.25			CHECKED BY: M.SLACK	DATE: 11/07/03		
	±0.5°	REMOVE ALL BURRS AND SHARP CORNERS		APPROVED BY: P.FISHWICK	DATE: 11/07/03		
	3.2	MACHINE SYMBOLS THUS		SCALE: N.T.S	SIZE: A3	DRG No. 276-154	ISSUE A

276-123

DO NOT SCALE

CURRENT PRODUCTION COPY

CELL BOOK	E

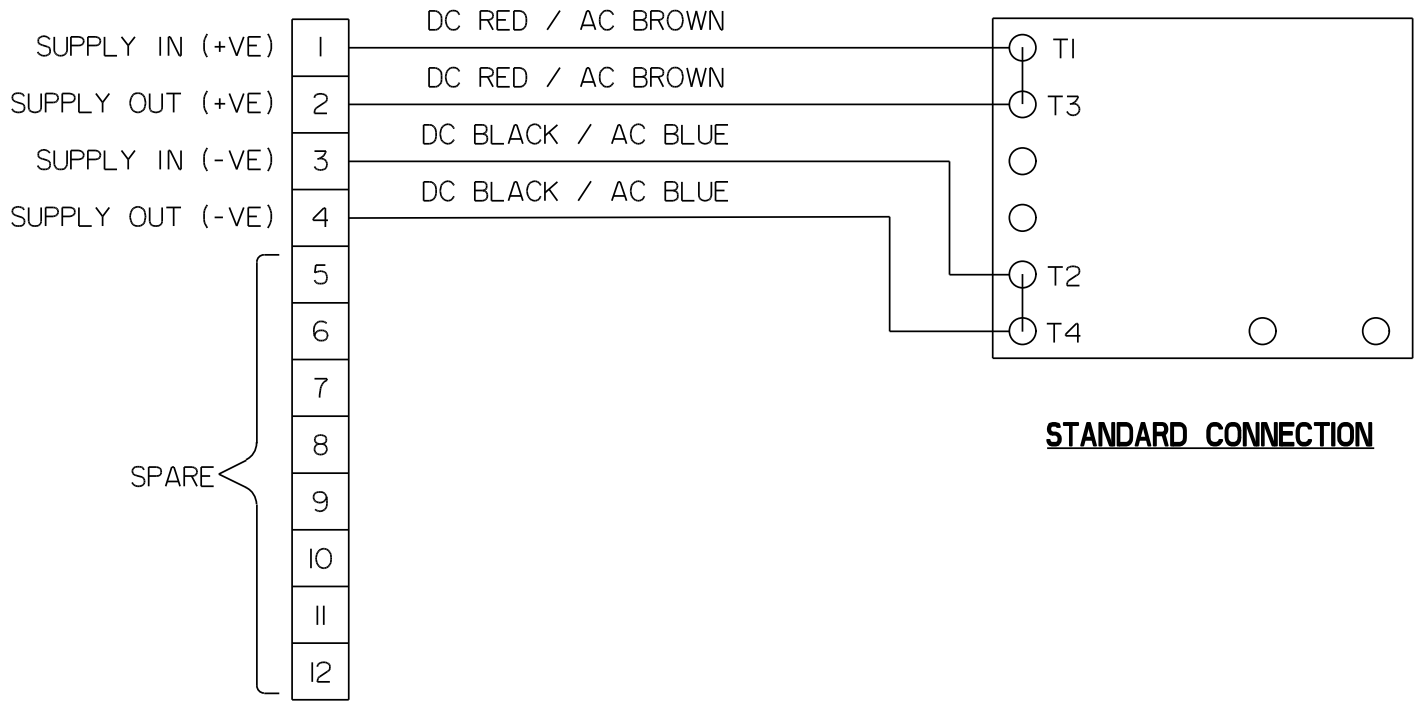

STANDARD CONNECTION

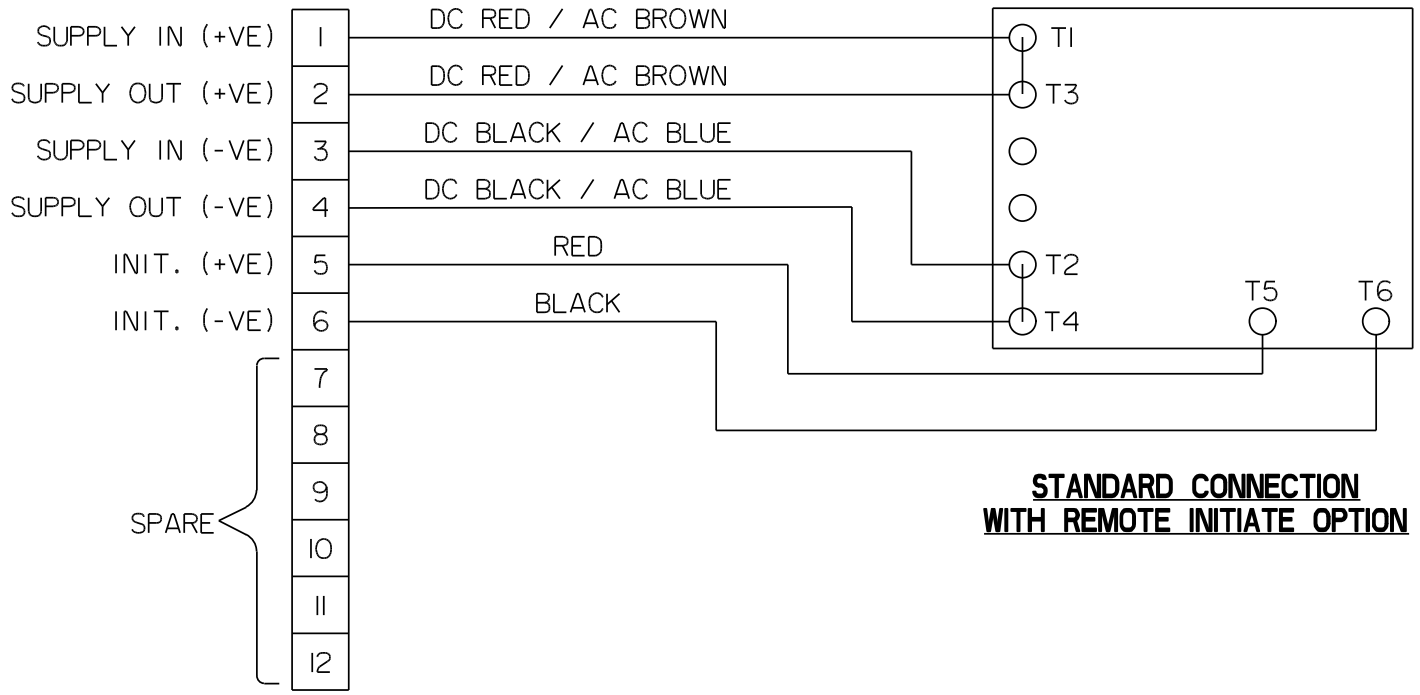

STANDARD CONNECTION WITH REMOTE INITIATE OPTION

MEDC Ltd, Colliery Road, Pinxton
Nottingham NG16 6JF, U.K.
Tel: +44 (0)1773 864100
Fax: +44 (0)1773 582800
e-mail:info@medc.com web:www.medc.com

DESIGNERS & MANUFACTURERS OF ELECTRICAL & ELECTRONIC EQUIPMENT & SYSTEMS FOR HAZARDOUS AREAS

ISSUES	
B.	12/10/04 PF

GENERAL TOLERANCES UOS
±0.25
±0.5°
3.2

ALL DIMENSIONS ARE IN MILLIMETRES UNLESS OTHERWISE STATED

REMOVE ALL BURRS AND SHARP CORNERS

MACHINE SYMBOLS THUS

THIS DRAWING IS CONFIDENTIAL AND IS THE PROPERTY OF MEDC AND MUST NOT BE REPRODUCED EITHER WHOLLY OR PARTLY. ALL RIGHTS IN RESPECT OF PATENTS, DESIGNS AND COPYRIGHT ARE RESERVED.

DRAWN BY: P.FISHWICK	DATE: 28/05/02	TITLE XBI5 ATEX WIRING DIAGRAM	SHT 2 OF 2
CHECKED BY: D.HAGIN	DATE: 28/05/02		
APPROVED BY: P.FISHIWCK	DATE: 28/05/02		
SCALE: N.T.S	SIZE: A3	DRG No. 276-123	ISSUE B