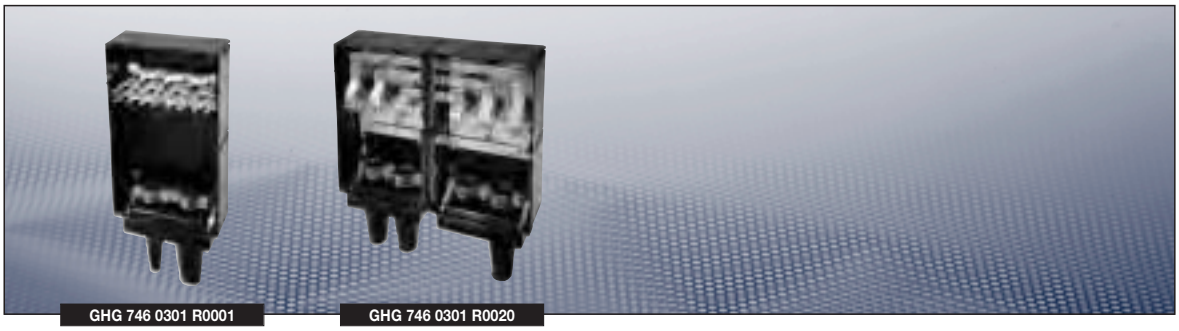

Technical data

Type 746 03	
Marking to 94/9/EC	Ex II 2 G Ex de ia/ib [ia/ib] m IIC T6 / Ex II 2 D Ex tD A21 IP66 T80 °C
Permissible ambient temperature	–20 °C to +40 °C
EC-Type Examination Certificate	PTB 99 ATEX 1044
IECEx certificate of conformity	IECEx BKI 07.0023
Marking accd. to IECEx	Ex de ia/ib m [ia/ib] IIC T4 ... T6 Ex tD A21 IP66 T80 °C
Rated voltage	up to 690 V
Rated current	depends on terminal mounting
Degree of EN 60529	IP54
Cable gland	via double cable pothead
Enclosure material	Glass-fibre reinforced polyester
Terminal cross section	up to 180 mm² or max. 240 mm²
Weight	746 0301 R0001 approx. 6.3 kg / 746 0301 R0008 approx. 16.5 kg

Ordering details

Type	Cable gland	No. of terminals	Order No.
Type 746 03 assembled with bold clamp 2 x 185 mm² + PE-bold clamp 2 x 185 mm²			
Ex-e	Double cable and box 1 x Entry sleeve 21-45 mm 1 x Entry sleeve 46-72 mm	3 x Ex-e 1 x PE	**GHG 746 0301 R0001**

Type	Cable gland	No. of terminals	Order No.
Type 746 03 assembled with bold clamp 240 mm² + PE-bold clamp 240 mm²			
Ex-e	Double cable and box 2 x Entry sleeve 46-72 mm	6 x Ex-e 2 x PE	**GHG 746 0301 R0008**

Type	Cable gland	No. of terminals	Order No.
Type 746 03 assembled with bold clamp 240 mm² + PE-bold clamp 240 mm²			
Ex-e	Double cable and box 1 x Entry sleeve 21-45 mm 2 x Entry sleeve 46-72 mm	12 x Ex-e 4 x PE	**GHG 746 0301 R0020**

Other versions available on request.

Cooper Crouse-Hinds © 2009 - all rights reserved

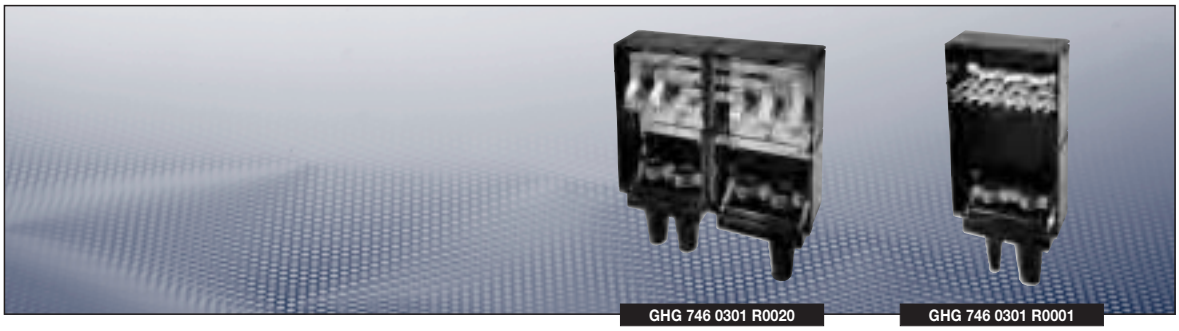

Dimension drawing

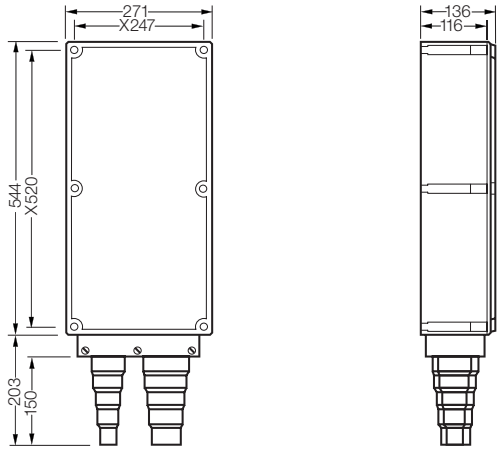

GHG 746 0301 R0001

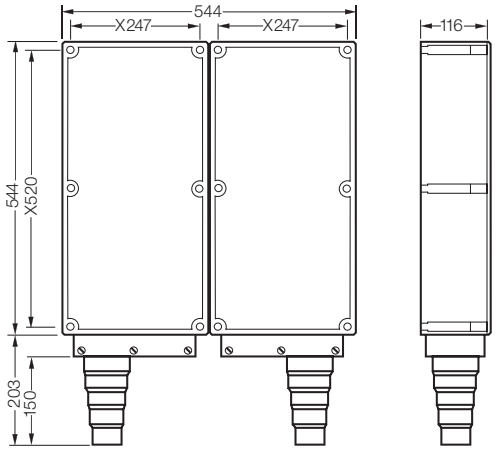

GHG 746 0301 R0008

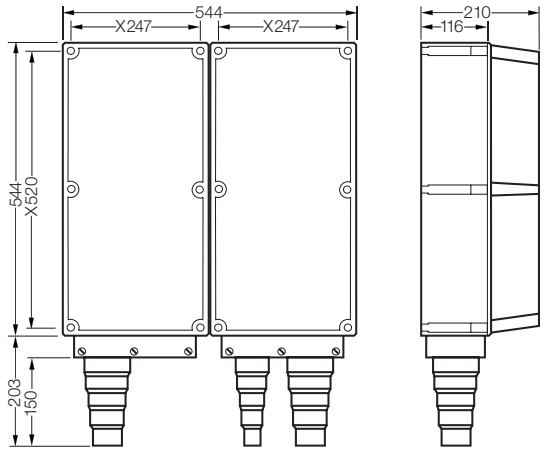

GHG 746 0301 R0020

X = fixing dimension

Dimensions in mm

Cooper Crouse-Hinds © 2009 - all rights reserved